# Half-Wave Mercury-Vapor Rectifier

*The 6894 is the same as the 6895 except for the following items:*

**Mechanical:**

Overall Length. . . . . 10-3/32" ± 7/16"
Socket. . . . . Johnson No.123-211, or equivalent
Base. . . . . .Skirted Medium-Metal-Shell Jumbo 4-Pin with Bayonet (JEDEC No.A4-69)
Basing Designation on BOTTOM VIEW. . . . . 4AT

Pin 1 - No Internal Connection
Pin 2 - Filament, Cathode Shield

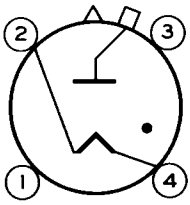


Pin 3 - No Internal Connection
Pin 4 - Filament
Cap - Anode

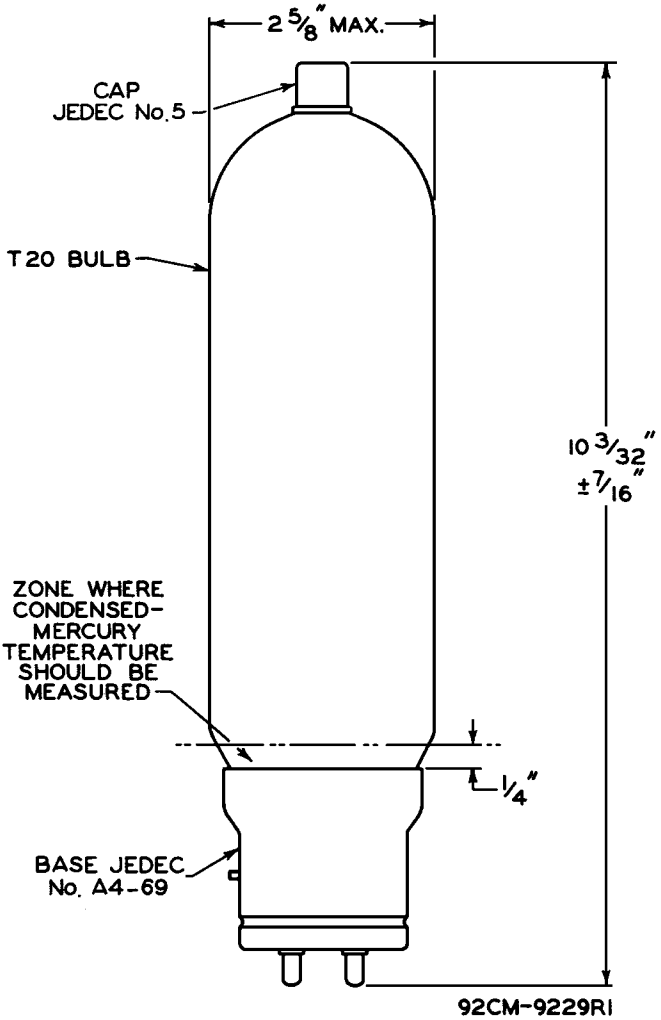


← Indicates a change.